* 0019655340101 *

Cambridge Assessment International Education

Cambridge International AS & A Level

CANDIDATE NAME

CENTRE NUMBER

CANDIDATE NUMBER

0808755536

PHYSICS **9702/22**

Paper 2 AS Level Structured Questions **May/June 2024**

1 hour 15 minutes

You must answer on the question paper.

No additional materials are needed.

INSTRUCTIONS

- Answer **all** questions.
- Use a black or dark blue pen. You may use an HB pencil for any diagrams or graphs.
- Write your name, centre number and candidate number in the boxes at the top of the page.
- Write your answer to each question in the space provided.
- Do **not** use an erasable pen or correction fluid.
- Do **not** write on any bar codes.
- You may use a calculator.
- You should show all your working and use appropriate units.

INFORMATION

- The total mark for this paper is 60.
- The number of marks for each question or part question is shown in brackets [ ].

This document has **16** pages. Any blank pages are indicated.

© UCLES 2024

[Turn over

Data

acceleration of free fall	g	=	$9.81\ \text{m s}^{-2}$
speed of light in free space	c	=	$3.00 \times 10^{8}\ \text{m s}^{-1}$
elementary charge	e	=	$1.60 \times 10^{-19}\ \text{C}$
unified atomic mass unit	1 u	=	$1.66 \times 10^{-27}\ \text{kg}$
rest mass of proton	m_p	=	$1.67 \times 10^{-27}\ \text{kg}$
rest mass of electron	m_e	=	$9.11 \times 10^{-31}\ \text{kg}$
Avogadro constant	N_A	=	$6.02 \times 10^{23}\ \text{mol}^{-1}$
molar gas constant	R	=	$8.31\ \text{J K}^{-1}\ \text{mol}^{-1}$
Boltzmann constant	k	=	$1.38 \times 10^{-23}\ \text{J K}^{-1}$
gravitational constant	G	=	$6.67 \times 10^{-11}\ \text{N m}^2\ \text{kg}^{-2}$
permittivity of free space	ε_0	=	$8.85 \times 10^{-12}\ \text{F m}^{-1}$
	$\left(\frac{1}{4\pi\varepsilon_0}\right.$	=	$\left.8.99 \times 10^{9}\ \text{m F}^{-1}\right)$
Planck constant	h	=	$6.63 \times 10^{-34}\ \text{J s}$
Stefan–Boltzmann constant	σ	=	$5.67 \times 10^{-8}\ \text{W m}^{-2}\ \text{K}^{-4}$

Formulae

uniformly accelerated motion	s	=	$ut + \frac{1}{2}at^2$
	v^2	=	$u^2 + 2as$
hydrostatic pressure	Δp	=	$\rho g \Delta h$
upthrust	F	=	$\rho g V$
Doppler effect for sound waves	f_o	=	$\frac{f_\text{s} v}{v \pm v_\text{s}}$
electric current	I	=	$Anvq$
resistors in series	R	=	$R_1 + R_2 + \ldots$
resistors in parallel	$\frac{1}{R}$	=	$\frac{1}{R_1} + \frac{1}{R_2} + \ldots$

DO NOT WRITE IN THIS MARGIN
DO NOT WRITE IN THIS MARGIN
DO NOT WRITE IN THIS MARGIN
DO NOT WRITE IN THIS MARGIN
DO NOT WRITE IN THIS MARGIN

BLANK PAGE

DO NOT WRITE IN THIS MARGIN
DO NOT WRITE IN THIS MARGIN
DO NOT WRITE IN THIS MARGIN
DO NOT WRITE IN THIS MARGIN
DO NOT WRITE IN THIS MARGIN

1 **(a)** The list below shows some SI quantities.

Underline the quantity that is **not** an SI base quantity.

charge current length time [1]

(b) A square solar panel with sides of length 1300 mm is shown in Fig. 1.1.

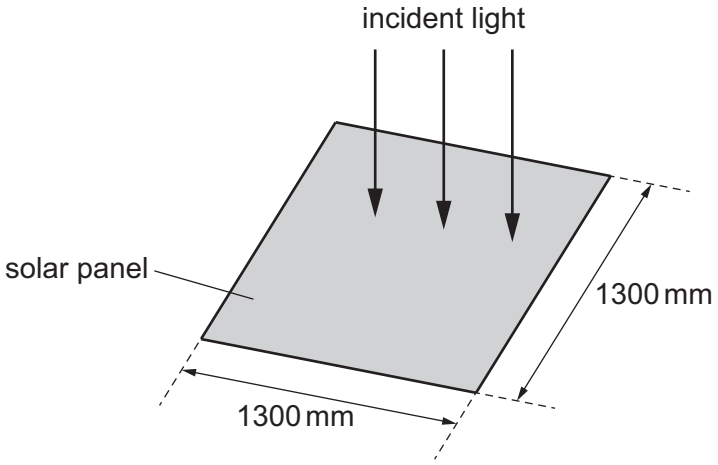

Fig. 1.1 (not to scale)

Light is incident normally on the solar panel.

(i) The power of the light incident on the solar panel is 750 W.

Calculate the intensity of the light.

intensity = ... $W m^{-2}$ [3]

(ii) The percentage uncertainty in the incident power is ± 3%.
The uncertainty in the length of each side is ± 5 mm.

Calculate the percentage uncertainty in the intensity of the light.

percentage uncertainty = ... % [2]

© UCLES 2024

DO NOT WRITE IN THIS MARGIN
DO NOT WRITE IN THIS MARGIN
DO NOT WRITE IN THIS MARGIN
DO NOT WRITE IN THIS MARGIN
DO NOT WRITE IN THIS MARGIN

(iii) The useful power output of the solar panel is 160 W.

Calculate the percentage efficiency of the solar panel.

efficiency = ... % [1]

(iv) Another square solar panel is placed so that light of the same intensity is incident normally on it. The new panel has shorter sides than the original panel. The new panel has the same power output as the original panel.

State and explain whether the efficiency of the new panel is greater than, less than or the same as the efficiency of the original panel.

.....

.....

.....

.....

..... [3]

[Total: 10]

DO NOT WRITE IN THIS MARGIN
DO NOT WRITE IN THIS MARGIN
DO NOT WRITE IN THIS MARGIN
DO NOT WRITE IN THIS MARGIN
DO NOT WRITE IN THIS MARGIN

2 A skydiver jumps from an aircraft at time $t = 0$ and falls vertically downwards. The variation with t of her velocity v is shown in Fig. 2.1.

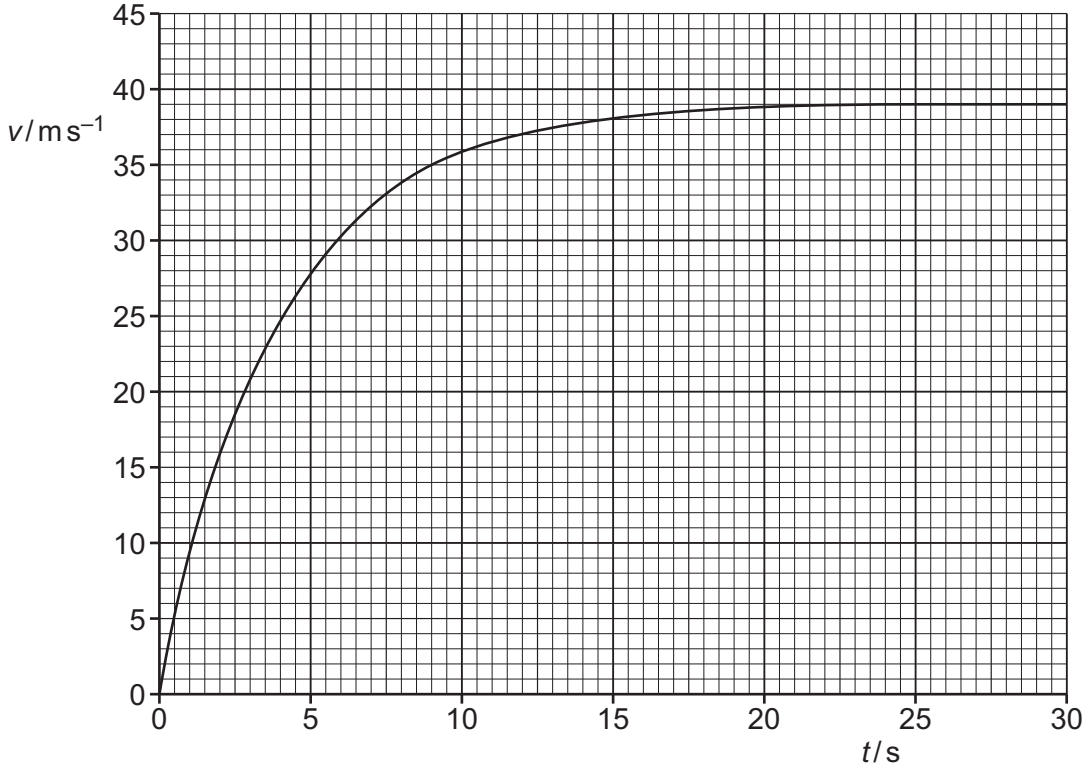

Fig. 2.1

(a) (i) Using Fig. 2.1, state the terminal velocity of the skydiver.

terminal velocity = ...m s^{-1} [1]

(ii) By drawing a suitable line on Fig. 2.1, determine the acceleration of the skydiver at time $t = 9.0$ s.

acceleration = ...m s^{-2} [2]

DO NOT WRITE IN THIS MARGIN
DO NOT WRITE IN THIS MARGIN
DO NOT WRITE IN THIS MARGIN
DO NOT WRITE IN THIS MARGIN
DO NOT WRITE IN THIS MARGIN

DO NOT WRITE IN THIS MARGIN
DO NOT WRITE IN THIS MARGIN
DO NOT WRITE IN THIS MARGIN
DO NOT WRITE IN THIS MARGIN
DO NOT WRITE IN THIS MARGIN

(b) The mass of the skydiver and her equipment is 68 kg. The upthrust on the skydiver is negligible.

After reaching terminal velocity, the skydiver opens her parachute at time t_1. A total drag force of 1800 N acts on the skydiver.

Determine the magnitude and direction of the acceleration of the skydiver at time t_1.

acceleration = ...$m\,s^{-2}$

direction = ...

[3]

(c) The parachute is fully open at time t_2. At a later time t_3 the skydiver reaches a constant velocity of $5.7\,m\,s^{-1}$.

(i) Describe and explain the variation with time of the magnitude of her acceleration between time t_2 and time t_3.

.....

.....

.....

.....

..... [2]

(ii) Calculate the change in momentum of the skydiver between time t_1 and time t_3.

change in momentum = ... N s [2]

[Total: 10]

3 Lightning occurs when charge builds up in the atmosphere, creating a potential difference between the ground and the atmosphere.

During a lightning strike there is an average current of 3.3×10^4 A for a time of 2.6×10^{-5} s.

(a) Calculate the charge transferred during the lightning strike.

charge = ... C [2]

(b) The potential difference between the ground and the atmosphere is 3.0×10^7 V.

Calculate the average power, in GW, transferred during the lightning strike.

power = ... GW [2]

(c) A lightning rod is attached to a tall building to conduct charge safely to the ground. The lightning rod is modelled as a uniform cylindrical copper cable of total length 95 m that runs from the ground to the top of the building, as shown in Fig. 3.1.

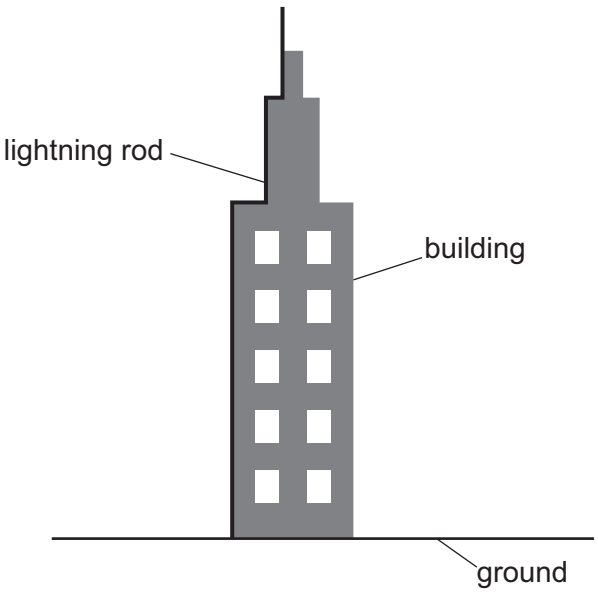

Fig. 3.1

DO NOT WRITE IN THIS MARGIN
DO NOT WRITE IN THIS MARGIN
DO NOT WRITE IN THIS MARGIN
DO NOT WRITE IN THIS MARGIN
DO NOT WRITE IN THIS MARGIN

(i) The resistance of the lightning rod is 9.6 Ω.
The resistivity of copper is 1.7×10^{-8} Ω m.

Determine the radius of the lightning rod.

radius = ... m [3]

(ii) The radius of the copper lightning rod is doubled with no change to its length.

State the effect of this change on the resistance of the lightning rod.

..... [1]

(d) A section of the lightning rod of length 0.12 m is removed for testing. A tensile stress of 1.9×10^6 Pa is applied, as shown in Fig. 3.2.

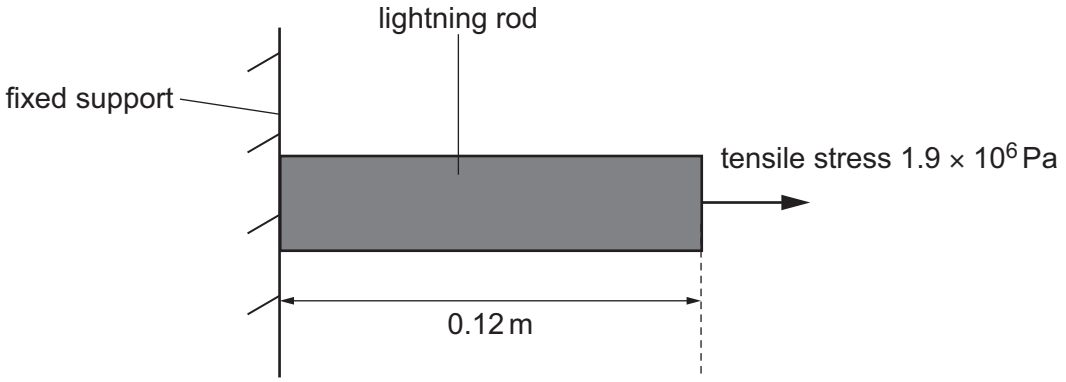

Fig. 3.2 (not to scale)

The section of the rod obeys Hooke's law. The Young modulus of copper is 1.3×10^{11} Pa.

Calculate the extension of the section.

extension = ... m [3]

[Total: 11]

DO NOT WRITE IN THIS MARGIN
DO NOT WRITE IN THIS MARGIN
DO NOT WRITE IN THIS MARGIN
DO NOT WRITE IN THIS MARGIN
DO NOT WRITE IN THIS MARGIN

4 A pinball machine uses a spring to launch a small metal ball of mass 4.5×10^{-2} kg up a ramp. The spring is compressed by 8.0×10^{-2} m and held in equilibrium, as shown in Fig. 4.1.

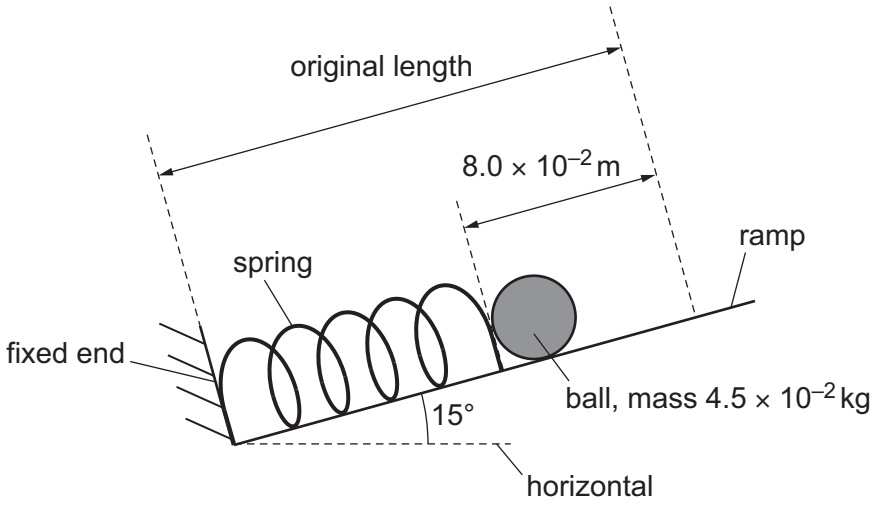

Fig. 4.1 (not to scale)

The ramp is at an angle of 15° to the horizontal.

(a) The spring obeys Hooke's law and has a spring constant of $29\,\text{N}\,\text{m}^{-1}$.

Calculate the elastic potential energy in the compressed spring.

elastic potential energy = ... J [2]

(b) The spring is released and expands quickly back to its original length.

(i) Calculate the increase in gravitational potential energy of the ball when the spring returns to its original length.

increase in gravitational potential energy = ... J [3]

DO NOT WRITE IN THIS MARGIN
DO NOT WRITE IN THIS MARGIN
DO NOT WRITE IN THIS MARGIN
DO NOT WRITE IN THIS MARGIN
DO NOT WRITE IN THIS MARGIN

DO NOT WRITE IN THIS MARGIN
DO NOT WRITE IN THIS MARGIN
DO NOT WRITE IN THIS MARGIN
DO NOT WRITE IN THIS MARGIN
DO NOT WRITE IN THIS MARGIN

(ii) The ball leaves the spring when the spring reaches its original length. Assume that all the elastic potential energy of the spring is transferred to the ball.

Calculate the speed of the ball as it leaves the spring.

speed = ... $m\,s^{-1}$ [3]

(c) The ball comes to rest on a horizontal trapdoor of negligible mass at a distance *d* from its pivot.
A force *F* acts vertically downwards at a distance of 2.0 cm from the pivot, as shown in Fig. 4.2.

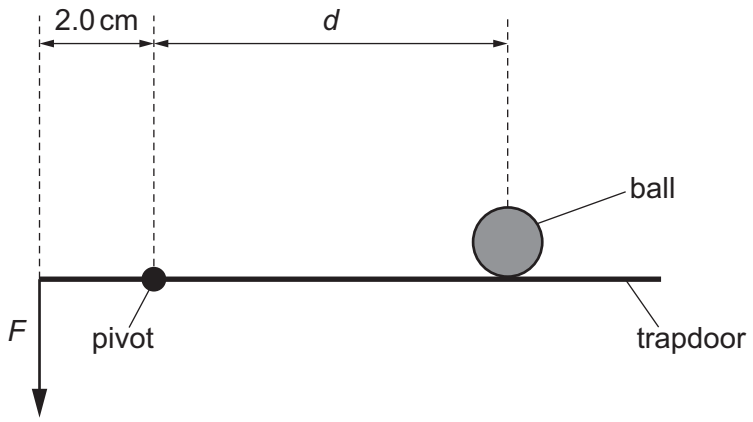

Fig. 4.2 (not to scale)

(i) The trapdoor is in equilibrium when *F* is 1.7 N.

Calculate *d*.

d = ... m [2]

(ii) Force *F* is decreased from 1.7 N.

State the direction of the resultant moment about the pivot on the trapdoor.

..... [1]

[Total: 11]

5 **(a)** State Kirchhoff's second law.

.....

..... [1]

(b) A battery of electromotive force (e.m.f.) 9.0 V and negligible internal resistance is connected in series with a variable resistor X and a thermistor Y as shown in Fig. 5.1.

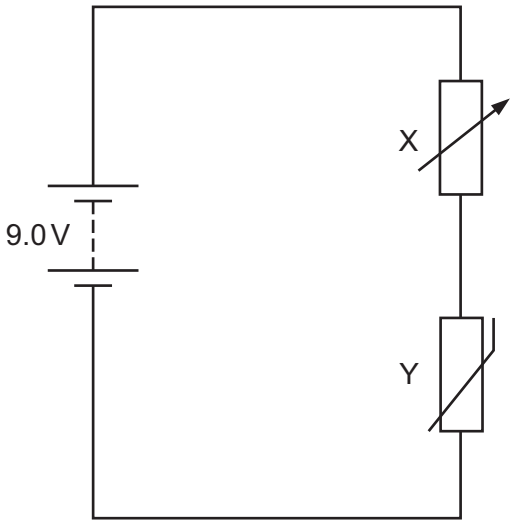

Fig. 5.1

Fig. 5.2 shows the relationship between temperature and resistance for the thermistor.

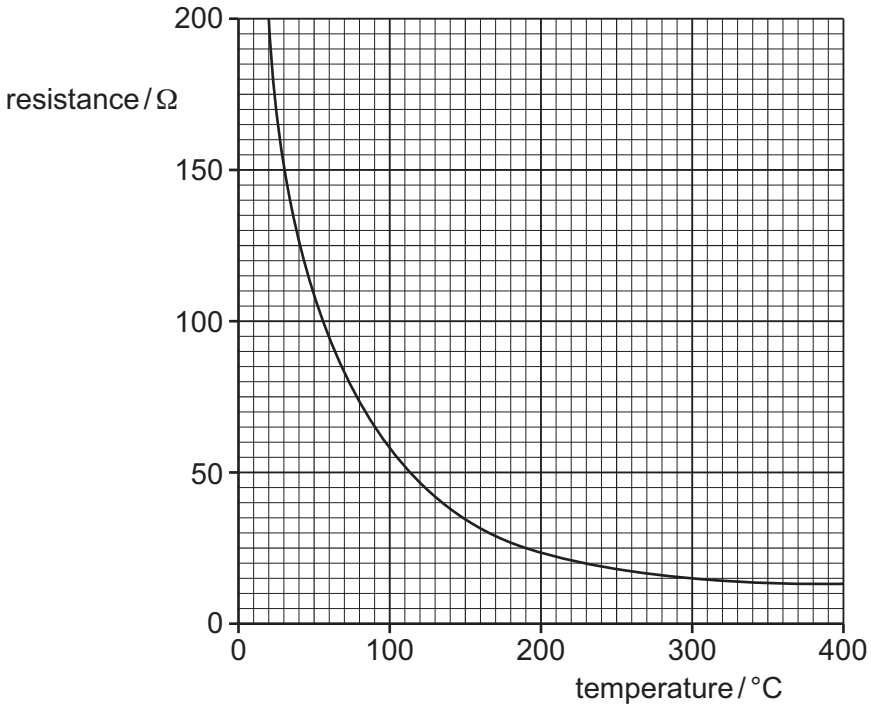

Fig. 5.2

DO NOT WRITE IN THIS MARGIN
DO NOT WRITE IN THIS MARGIN
DO NOT WRITE IN THIS MARGIN
DO NOT WRITE IN THIS MARGIN
DO NOT WRITE IN THIS MARGIN

(i) The current in the circuit is 1.1×10^{-2} A. The potential difference across Y is 4.0 V.

Calculate the resistance of X.

resistance = ... Ω [2]

(ii) The temperature of Y is changed to 190 °C. The resistance of X remains unchanged.

Determine the new potential difference across Y.

potential difference = ... V [3]

(iii) The resistance of X is increased. The temperature of Y remains at 190 °C.

By reference to the current in the circuit, state and explain the effect of this change, if any, on the potential difference **across Y**.

.....

.....

.....

.....

.....

..... [3]

[Total: 9]

DO NOT WRITE IN THIS MARGIN

6 Light of a single frequency is incident normally on a diffraction grating. An interference pattern of bright and dark fringes forms on the semicircular screen shown in Fig. 6.1.

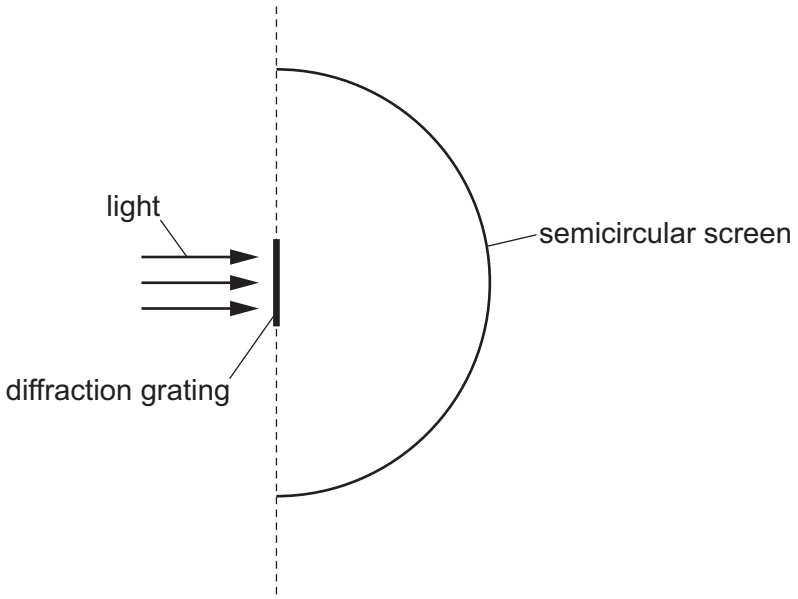

Fig. 6.1 (not to scale)

The light has wavelength 520 nm.
The separation of the lines in the grating is 3.8×10^{-6} m.

(a) Determine the total number of bright fringes formed on the screen.

number of bright fringes = ... [3]

DO NOT WRITE IN THIS MARGIN
DO NOT WRITE IN THIS MARGIN
DO NOT WRITE IN THIS MARGIN
DO NOT WRITE IN THIS MARGIN
DO NOT WRITE IN THIS MARGIN

(b) The light is replaced with red light of a single frequency.

(i) State whether the frequency of the red light is greater than, less than or the same as the frequency of the original light.

..... [1]

(ii) State and explain the effect of this change on the number of bright fringes formed on the screen. A calculation is not required.

.....

.....

.....

..... [2]

[Total: 6]

DO NOT WRITE IN THIS MARGIN
DO NOT WRITE IN THIS MARGIN
DO NOT WRITE IN THIS MARGIN
DO NOT WRITE IN THIS MARGIN
DO NOT WRITE IN THIS MARGIN

7 A particle Q and a particle R are each composed of one quark and one antiquark.

(a) State the name of the class (group) of particles that includes Q and R.

..... [1]

(b) Q has a charge of –1*e*, where *e* is the elementary charge. R has a charge of 0.

Complete Table 7.1 to show a possible second quark in each of Q and R.

Table 7.1

	charge	first quark	second quark
Q	–1*e*	strange	
R	0	anti-up	

[2]

[Total: 3]

DO NOT WRITE IN THIS MARGIN

DO NOT WRITE IN THIS MARGIN

DO NOT WRITE IN THIS MARGIN

DO NOT WRITE IN THIS MARGIN

DO NOT WRITE IN THIS MARGIN

Permission to reproduce items where third-party owned material protected by copyright is included has been sought and cleared where possible. Every reasonable effort has been made by the publisher (UCLES) to trace copyright holders, but if any items requiring clearance have unwittingly been included, the publisher will be pleased to make amends at the earliest possible opportunity.

To avoid the issue of disclosure of answer-related information to candidates, all copyright acknowledgements are reproduced online in the Cambridge Assessment International Education Copyright Acknowledgements Booklet. This is produced for each series of examinations and is freely available to download at www.cambridgeinternational.org after the live examination series.

Cambridge Assessment International Education is part of Cambridge Assessment. Cambridge Assessment is the brand name of the University of Cambridge Local Examinations Syndicate (UCLES), which is a department of the University of Cambridge.

© UCLES 2024